Poseidon 4002
MANUAL

Poseidon 4002 MANUAL

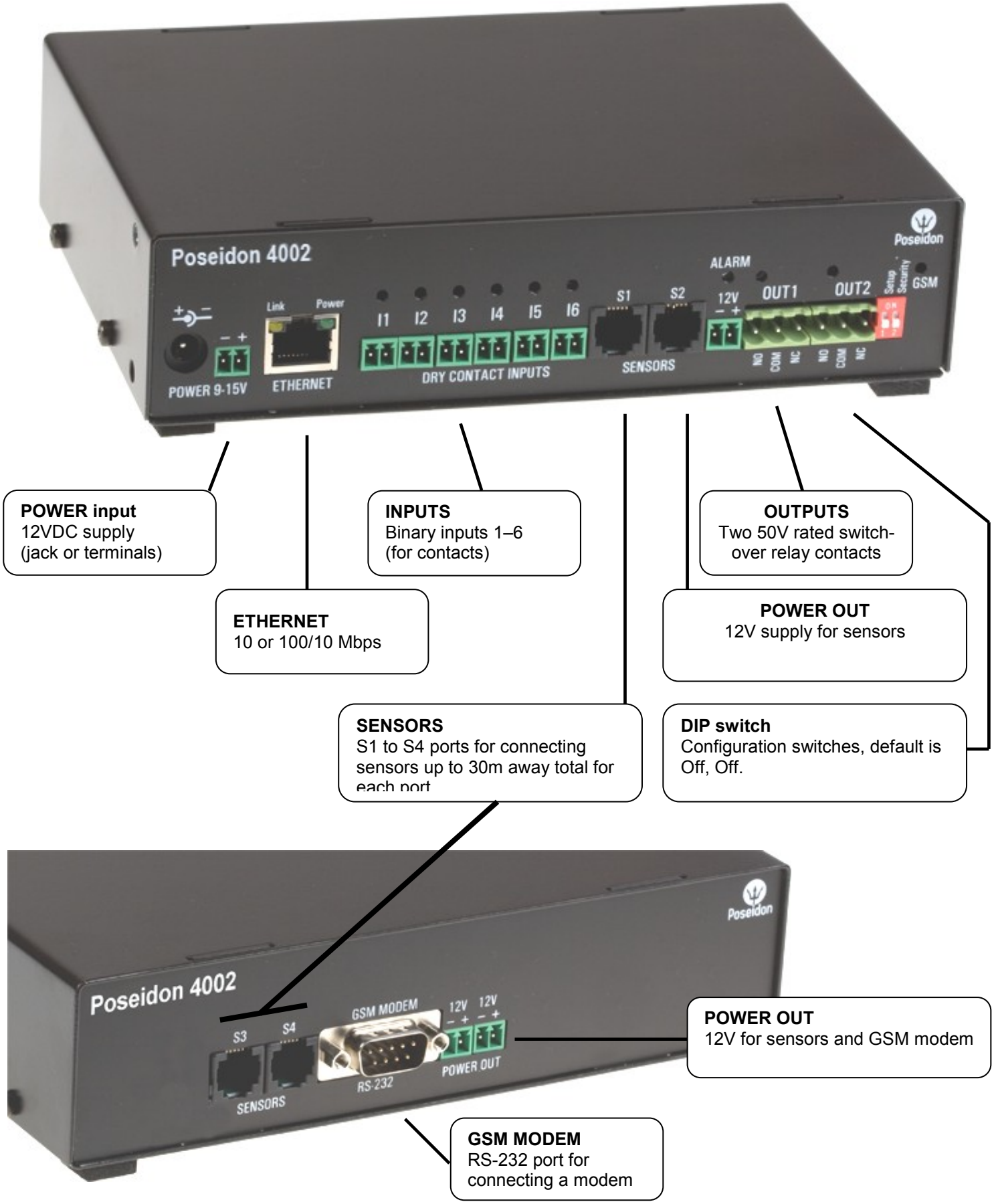

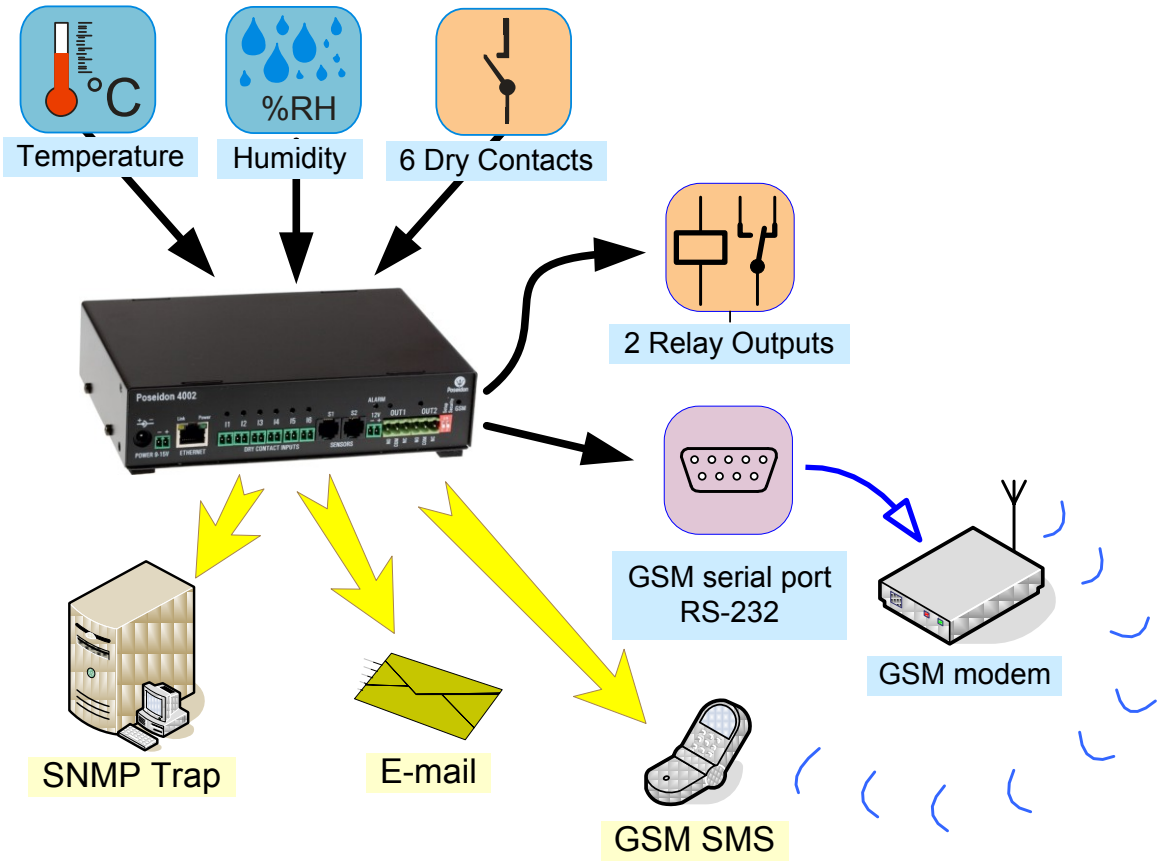

Recommended connections

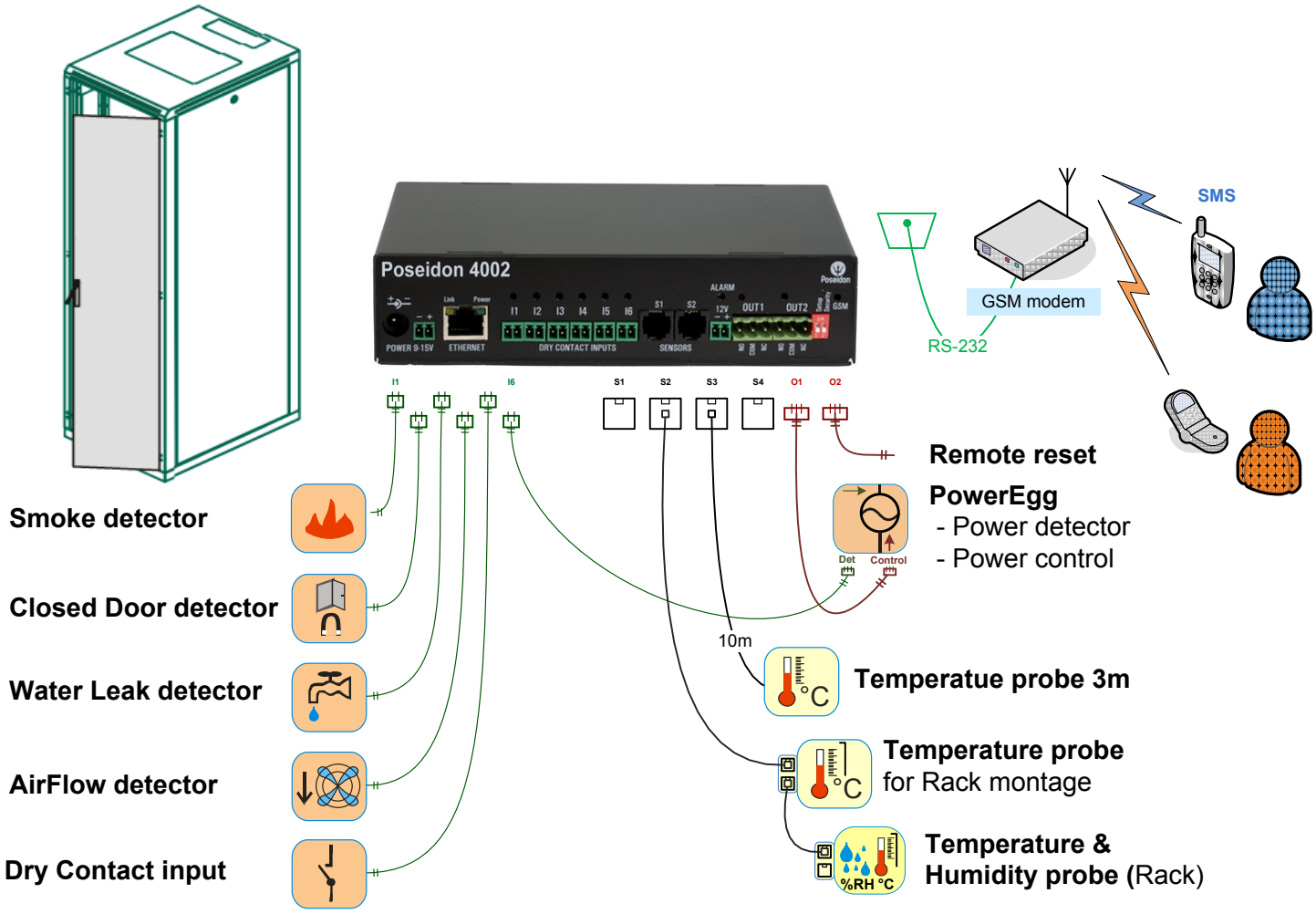

First steps

1) Connecting the cables

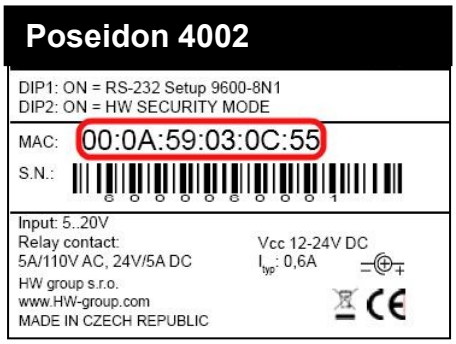

- Turn the unit upside down and write down its MAC address that is printed on the label.
- Set the switches: **DIP1=Off**, **DIP2=Off**.
- Connect the unit to the Ethernet (with a patch cable to a switch, cross-over cable to a PC), RJ-45 port.
- Plug the power adapter into a mains outlet and connect it to the Poseidon power jack.
- The green **POWER** LED lights up.
- If the Ethernet connection works properly, the **LINK** LED lights up after a short while, and then flashes whenever data is transferred (activity indication).

2) Configuring the IP address – UDP Config

UDP Config – root directory of the supplied CD (Windows and Linux versions).
Download from www.HW-group.com Software > UDP Config.

- Click the icon to launch **UDP Config -** automatically search connected devices.
- Device search works in local network only.
- Individual units are identified by MAC addresses (label at the bottom side of the unit).
- Double-click a MAC address to open a basic device configuration dialog.

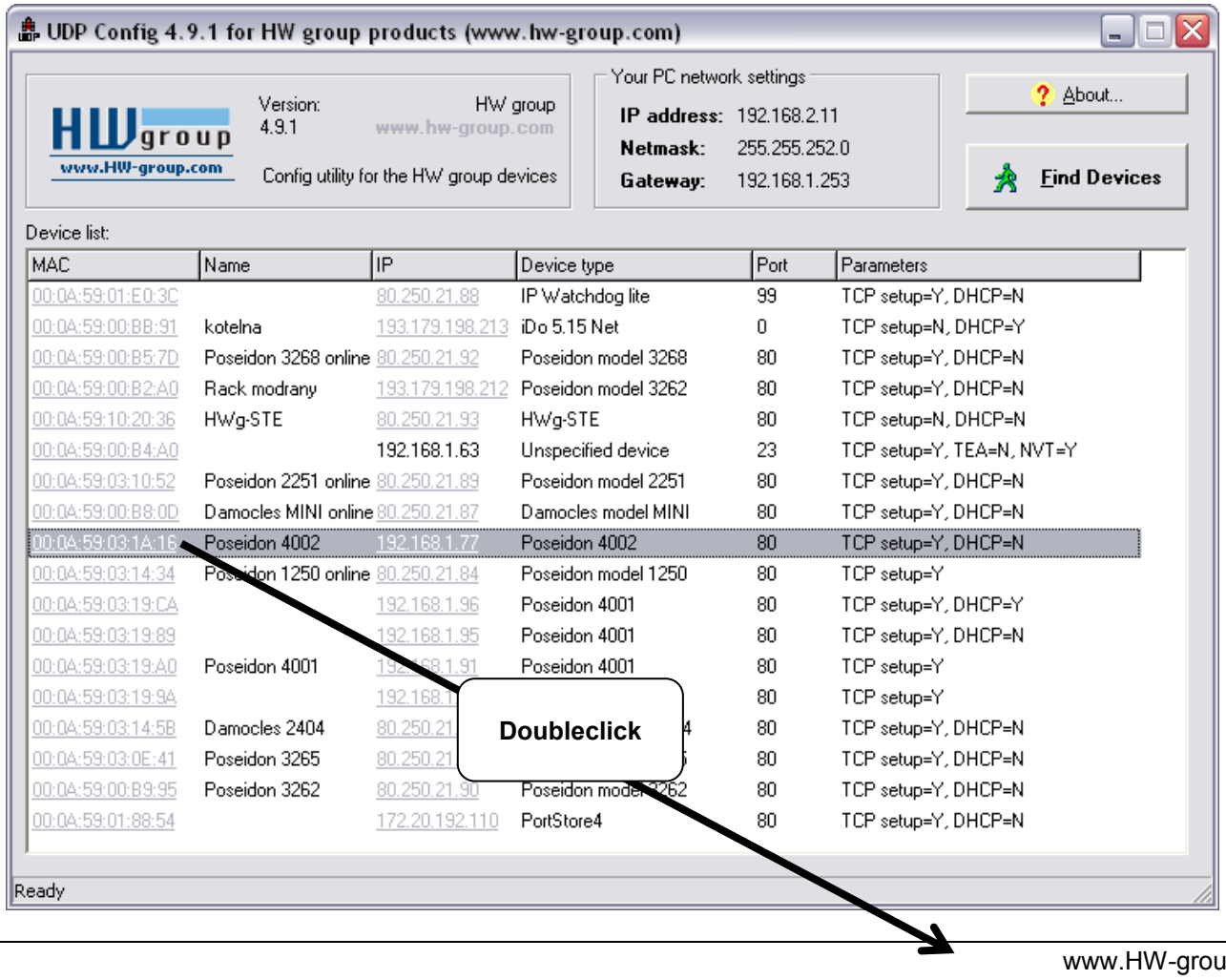

First steps

Configure network parameters

- IP address / HTTP port (80 by default)
- Network mask
- Gateway IP address for your network
- Device name (optional)

Click the **Apply Changes** button to save the settings.

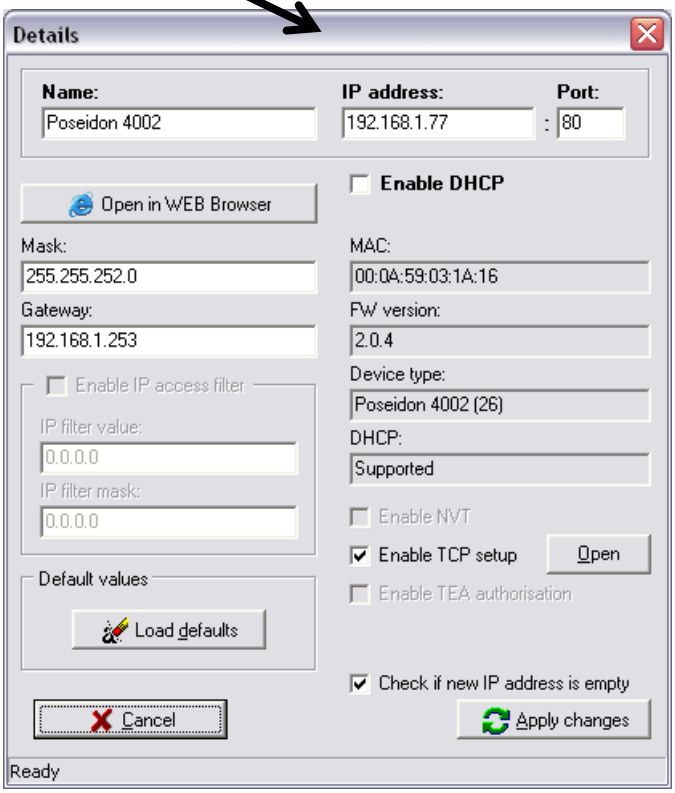

You may also use the following utilities to configure the IP address:

- **UDP Config for Linux**
- **RS-232 serial port** (any terminal program, 9600 8N1, DIP1=ON, restart)

IMPORTANT:

- *To reset the device to factory defaults, toggle DIP1 several times within 5 seconds after power-up.*
- *No configuration changes can be stored while DIP2=On. To change the IP address, set DIP2=Off.*

First steps

4) WWW interface of the device

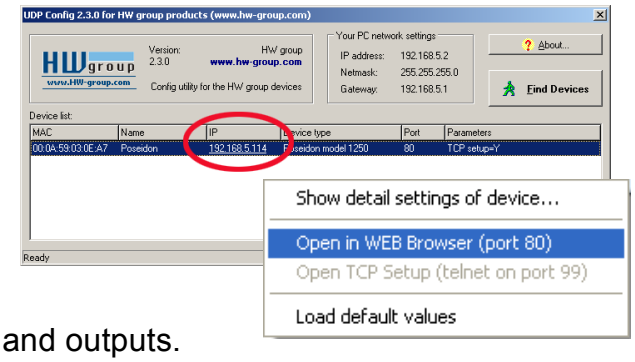

- **To open the WWW interface of the device**:
  - Enter the IP address into a web browser
  - Click the IP address in UDP Config
  - Click the underlined IP address in UDP SETUP
- The WWW page displays current states of inputs and outputs.
- Click the "**Graphic Flash SETUP**" link to open the graphical configuration interface (Flash Setup).

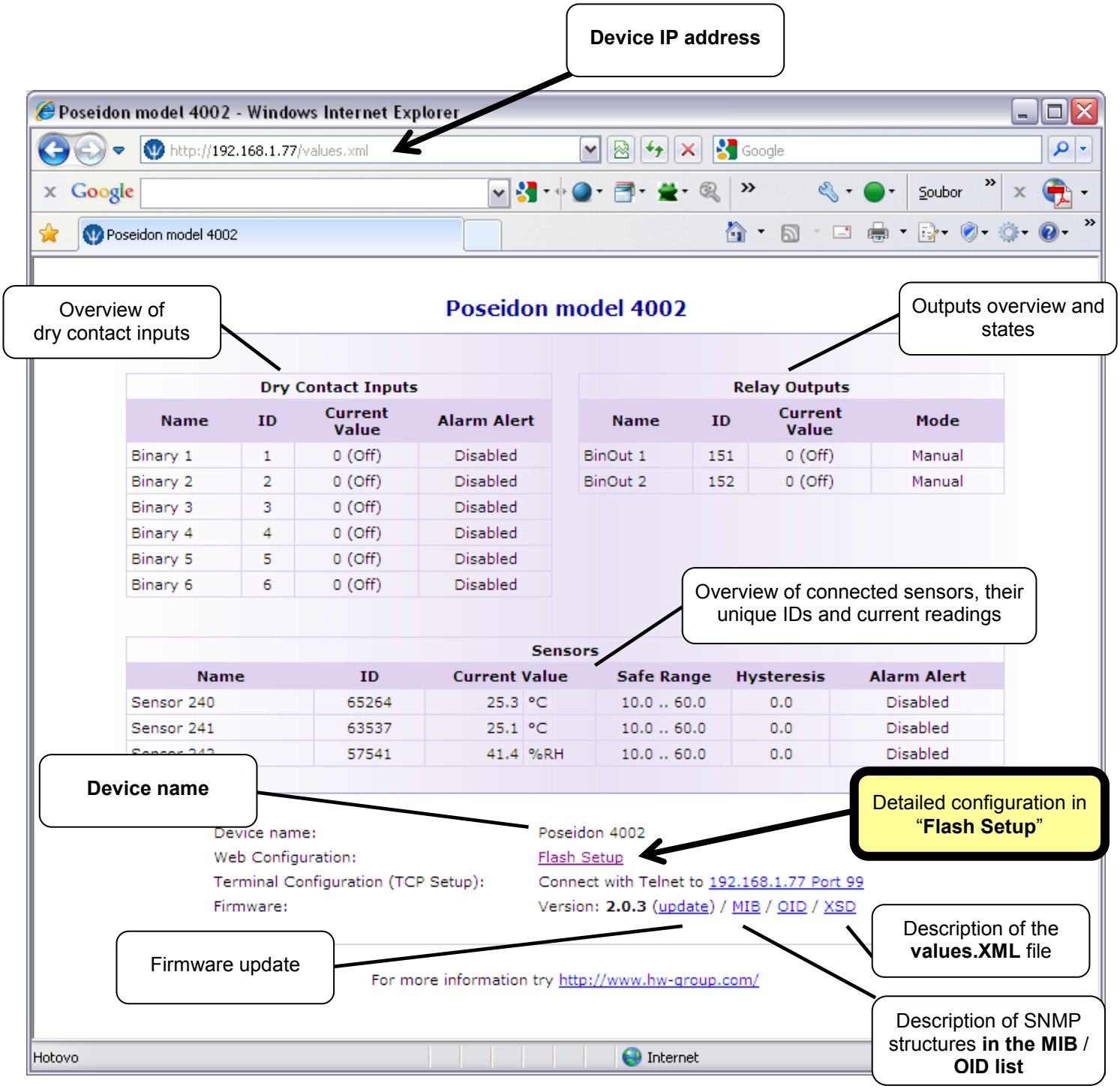

Flash SETUP

To open the FLASH interface, FLASH support needs to be installed on your PC. If the computer is connected to the Internet, the needed plug-in is downloaded automatically.

- **General**: Overview of current readings
- **General Setup:** IP address, DNS, security (username/password or IP range)
- **SNMP:** SNMP / SNMP Trap configuration (ports and alarm recipients)
- **Email & SMS**: Configuration and test
- **Log & Time**: Time configuration, NTP server
- **Sensors**: Device name, sensor names, status overview
- **Outputs**: Control and mode configuration of outputs
- **System**: Firmware upgrade

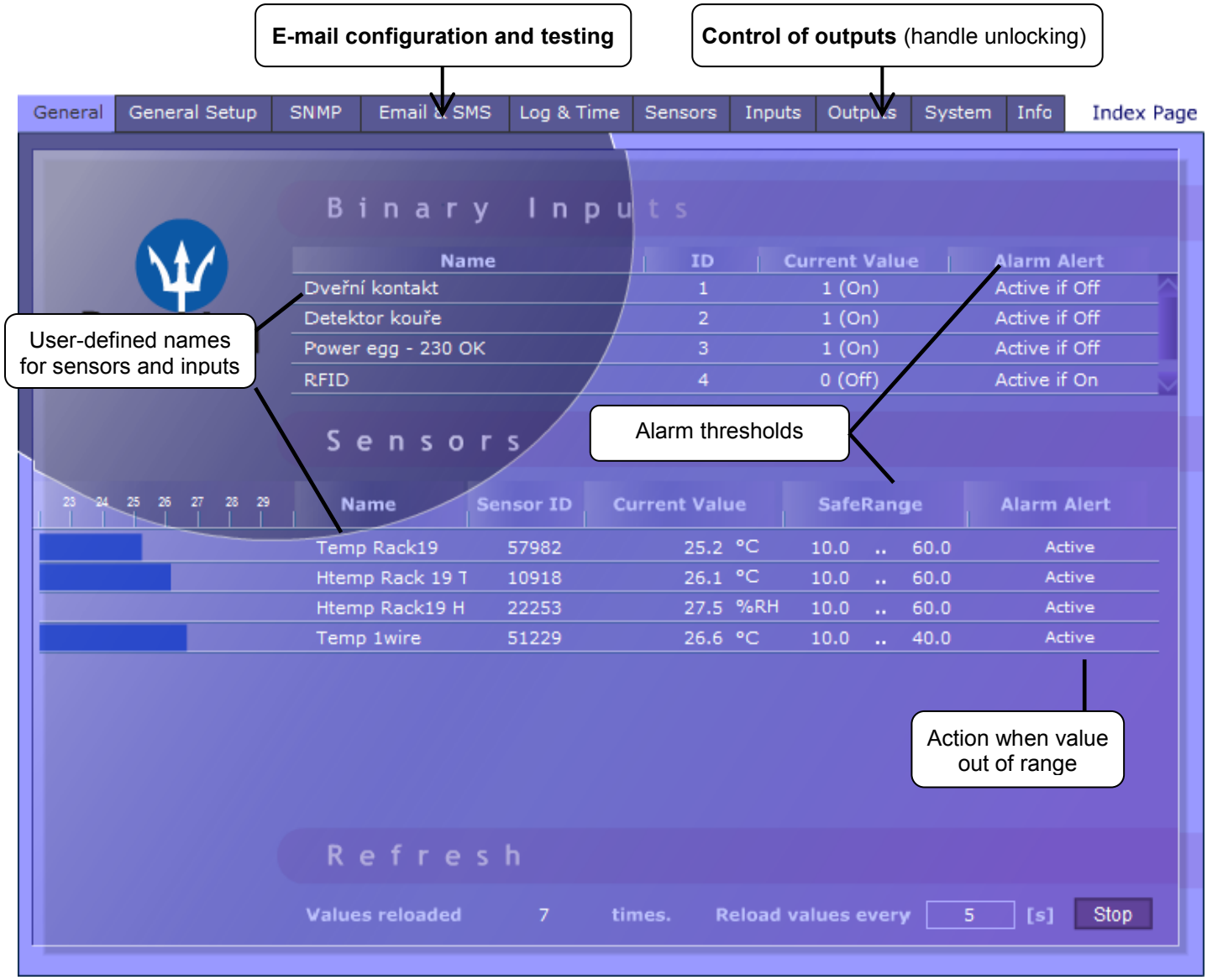

Refresh function in the main tab controls the update interval for displaying new sensor readings.

Email & SMS

General | General Setup | SNMP | Email & SMS | Log & Time | Sensors | Inputs | Outputs | System | Info | Index Page

Poseidon

Email Settings

SMTP Server	some.smtp.server [IP Address or DNS Name]
Port	25
Email Sender Address	user@domain.com
Authentication	No
Name/Password	User login name /
Email Subject Text	Subject_0
Alarm Email Recipient	To0@domain.com
Alarm Email Copy	To1@domain.com
Periodic Log Recipient	

Sends a test e-mail and shows the connection log → Send Test Email

GSM SMS Interface Enable ☑

RS-232 GSM Module	Waiting for modem
SMS + Ring when Alarm	
SMS Center Number	
Alarm SMS Recipient 1	
Alarm SMS Recipient 2	

Sends a test SMS and shows the connection log → Send Test SMS

Apply Changes

To send e-mail, check:
1) Correct **Gateway IP** address 2) **DNS server** in network settings 3) **SMTP server** and port 4) **Authentication** turned on, correct **username** and **password** 5) **Spam filter** for your mailbox is disabled

To send SMS, check:
1) Supported **GSM modem** connected with the supplied cable 2) SIM card inserted in the GSM modem, **deactivated PIN** 3) GSM modem turned on 4) GSM SMS interface enabled, modem status is "**Ready**" 5) Displayed **SMS Center** number (retrieved from SIM)

Warning: *Configuration changes must be confirmed by clicking the Apply Changes button.*

Sensors

General | General Setup | SNMP | Email & SMS | Log & Time | Sensors | Inputs | Outputs | System | Info | Index Page

Sensors

Name	Sensor ID	Current Value	Safe Range			Hysteresis Idle Range	Delay [s]	Out of Safe Range SNMP Trap	Out of Safe Range Email & SMS
Temp Rack19	57982	25.5 °C	10.0	-	60.0	0.0	0	☑	☐
Htemp Rack 19 T	10918	26.1 °C	10.0	-	60.0	0.0	0	☑	☐
Htemp Rack19 H	22253	25.6 %RH	10.0	-	60.0	0.0	0	☑	☐
Temp 1wire	51229	26.8 °C	10.0	-	40.0	0.0	0	☑	☐

Enter sensor name, will be shown in E-mail, SMS or SNMP traps

Sends a SNMP trap if the "Safe Range" for this sensor is exceeded

Sends a SMS if the "Safe Range" for this sensor is exceeded

Scans connected sensors and displays detected sensors

Apply Changes

Autodetect Sensors

To avoid numerous false alerts (by e-mail or SMS) whenever the reading fluctuates around the threshold, you can use:

1) **Hysteresis Idle Range**
   Tolerance band around the "Safe Range". Prevents multiple alarm alerts.

2) **Delay [s]**
   Delays the information about alarm beginning and alarm end by a specified time. Can be used for binary contacts, too.

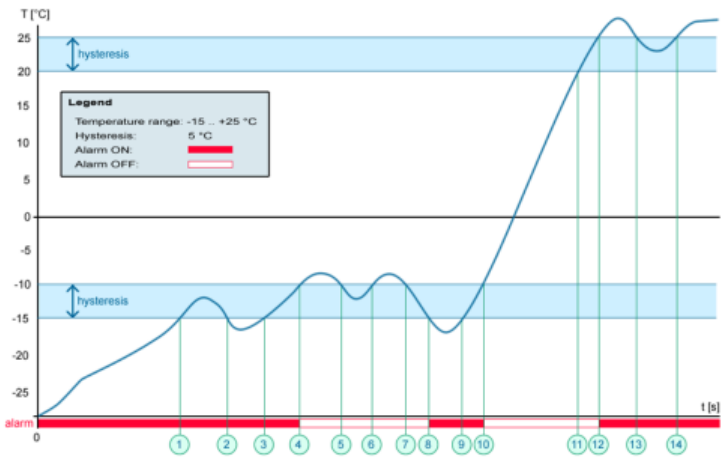

Tip: For details, see the complete "Poseidon family" manual.

Warning: *Configuration changes must be confirmed by clicking the Apply Changes button.*

Inputs

General | General Setup | SNMP | Email & SMS | Log & Time | Sensors | Inputs | Outputs | System | Info | Index Page

Poseidon

Dry Contact Inputs

Dry Contact Inputs state reaction: Inactive

Name	ID	Current Value	Alarm State	Delay[s]
Binary 1	1	0 (Off)	Inactive	0
Binary 2	2	0 (Off)	Active if On	0
Binary 3	3	0 (Off)	Active if Off	0
Binary 4	4	0 (Off)	Inactive	0
Binary 5	5	0 (Off)	Inactive	0
Binary 6	6	0 (Off)	Inactive	0

Apply Changes

Enter sensor name (will be shown in E-mail, SMS or SNMP traps)

ALARM CONTACT STATUS:

- **Active if On**
  Alarm when the contact **closes** (1 = On)
- **Active if Off**
  Alarm when the contact **opens** (0 = Off)
- **Inactive**
  No alarm

REACTION TO CONTACTS:

- **Inactive**
- Send a **SNMP Trap**
- Send an **E-mail**
- Send **Email and SNMP Trap**

Inputs wiring

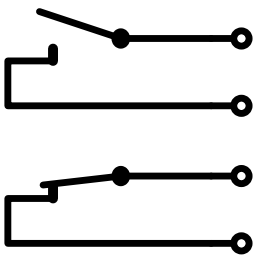

0 (Off)

1 (On)

FAQ

- Poseidon will send alarm activation and alarm deactivation for each contact and/or sensor.
- E-mail format cannot be changed; sensors may have custom names.
- Yellow background in a line with a sensor or an input means that the safe range is exceeded but alarm notification is off.

Note: *Configuration changes must be confirmed by clicking the Apply Changes button.*

TIP

- **Poseidon family manual**
  For a detailed description of the configuration and all tabs in the interface, see the "**Poseidon Family**" manual. It is available on the web and the install CD.

Outputs

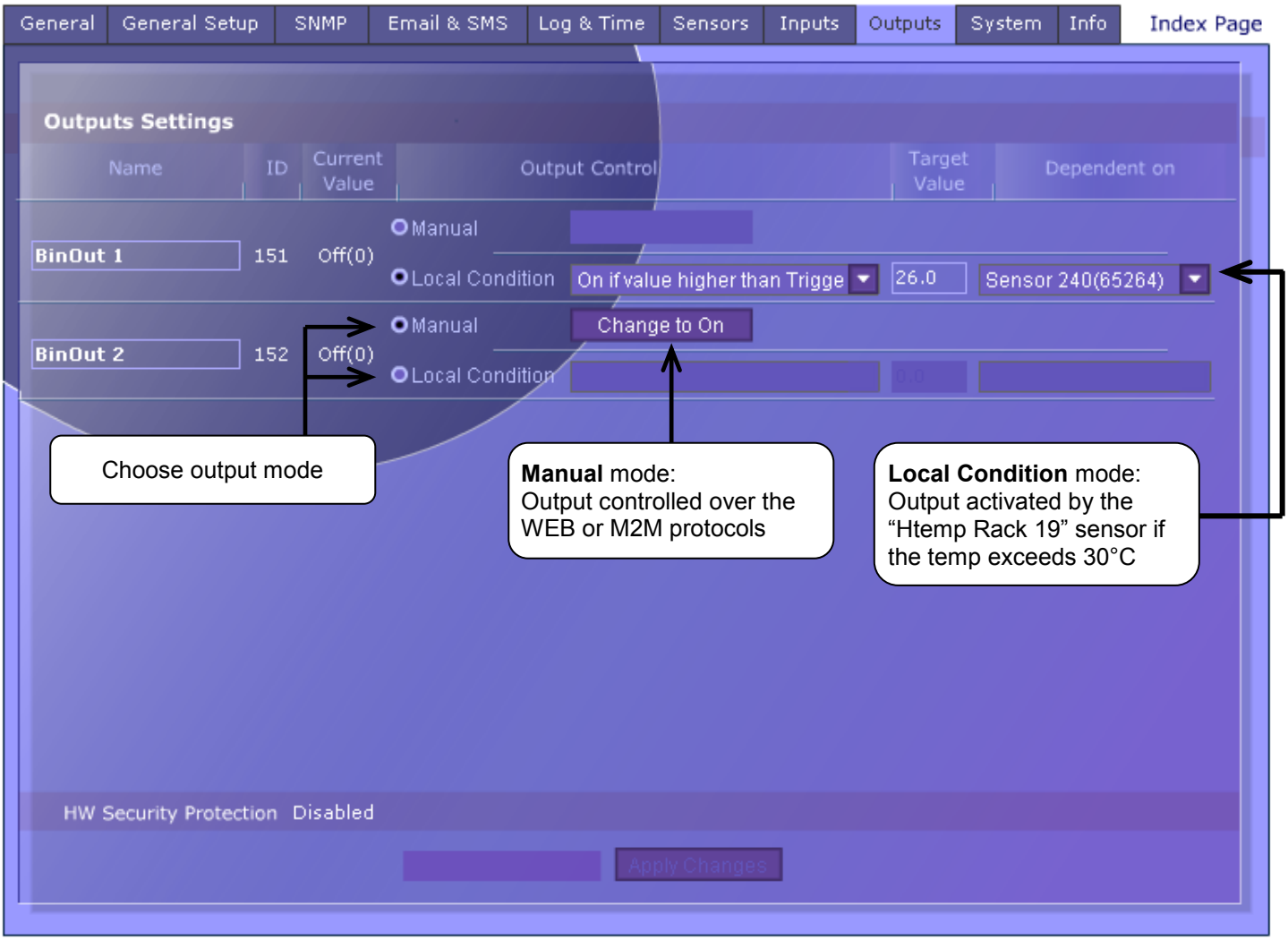

Output mode:

A) **Manual**
Output can be controlled in the Flash interface, or from any application using M2M protocols (XML, SNMP, Modbus/TCP).
The output cannot be used in "thermostat" mode – See local condition.

B) **Local Condition**
The output cannot be controlled in the Flash interface. The output is controlled with a specified condition. The output is read-only for all M2M protocols.
The output cannot be controlled remotely.

- **On if any alarm**
  The output is active if at least one of the inputs or sensors is in alarm.
- **On if value equal to Trigger**
  The output is active if the sensor reading matches the "Target Value".
- **On if value higher than Trigger**
  The output is active if the sensor reading exceeds the "Target Value".
- **On if value lower than Trigger**
  The output is active if the sensor reading is below the "Target Value".
- **Dependent On –** sensor / input to which the condition applies.

Warning: *Configuration changes must be confirmed by clicking the Apply Changes button.*

Software Applications

HWg-PDMS

HWg-PDMS is a Windows application for data logging and quick export of reports to MS Excel. Sensor readings from connected devices are stored in a database. Readings are received over XML (http) or e-mail. Works with the PD Trigger application to process alarms.

The database can be accessed from a MS EXCEL sheet, or through an API (examples are available for .NET, VB, C#, Borland C++, Delphi, Microsoft C++).

HWg-PDMS: Free version for 3 sensors available for your trial.

PD Trigger

To react to alarms and to control outputs, the PD Trigger application can be used. It reacts to incoming Alarm alerts by, for instance, activating a networked relay. (Available for download at our website.)

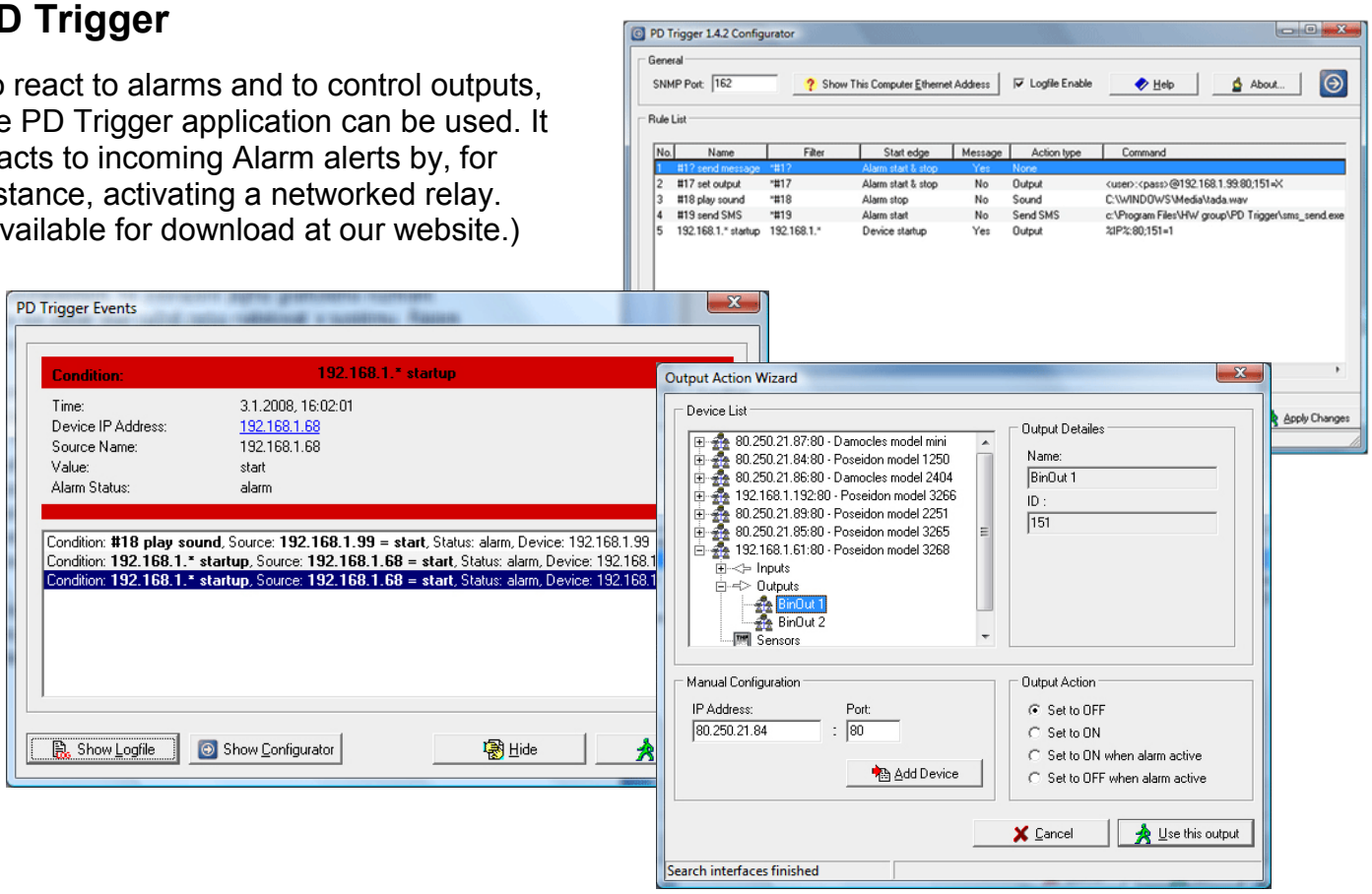

HWg-PD Trigger: Free version for 2 conditions available for your trial.

PosDamIO

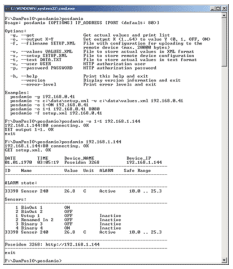

Poseidon Damocles I/O is a command-line utility for Windows and Linux that lets you control Poseidon and Damocles units over the XML interface. It can display the states of sensors, inputs and outputs, as well as set an output high or low.

CapTemp and MonTemp

CapTemp and MonTemp is a pair of utilities to monitor production processes. The programs can supervise all sensors from HW group (temperature and humidity sensors, contacts, etc) as well as sensors by other manufacturers.

CapTemp logs the readings into an internal database, displays several most recent ones, and processes conditions and alarms. Alerts to readings within an alarm range are sent by e-mail, or by SMS via a GSM modem connected to the PC.

MonTemp subsequently processes stored data and generates graphic reports, histograms, as well as ISO or HACCP protocols.

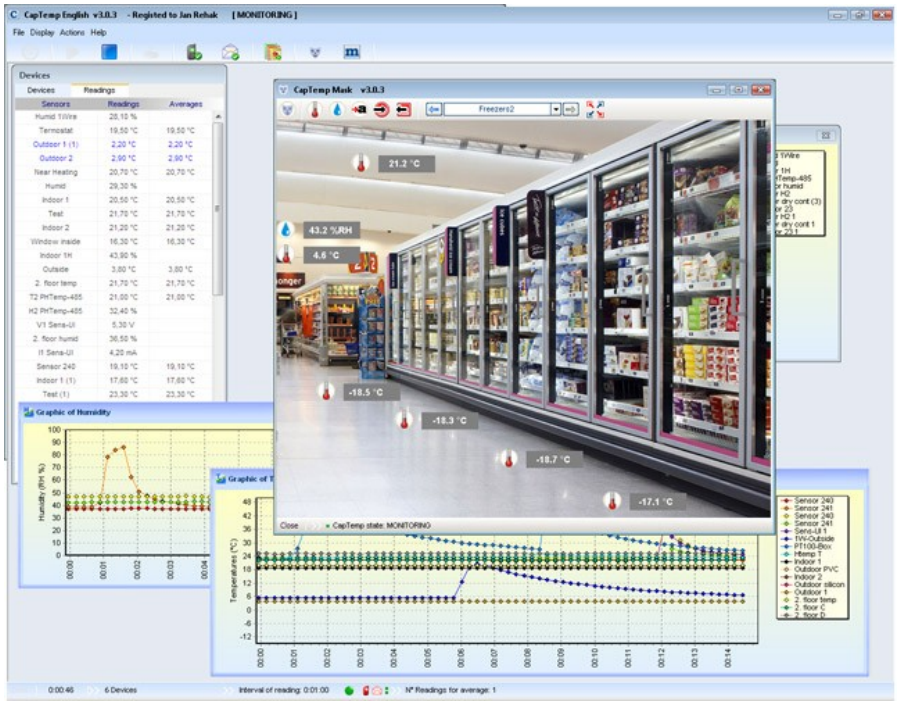

- CapTemp supports Poseidon, Damocles and I/O Controller products
- Alarm alerts are sent by e-mail or SMS (GSM modem)
- Concise graphical environment
- Supports conditions and rules for simple control tasks
- Evaluation version functions for 21 days without restrictions

Third-party SW applications

HW group maintains a database of software applications that are tested to work with Poseidon products. See the HWg website for an overview:

- SNMP Network Management applications
- IP surveillance systems
- Security applications

Technical specifications

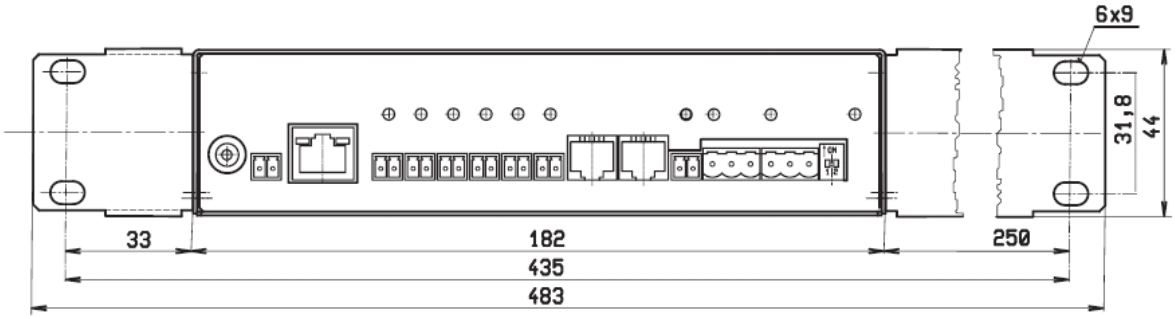

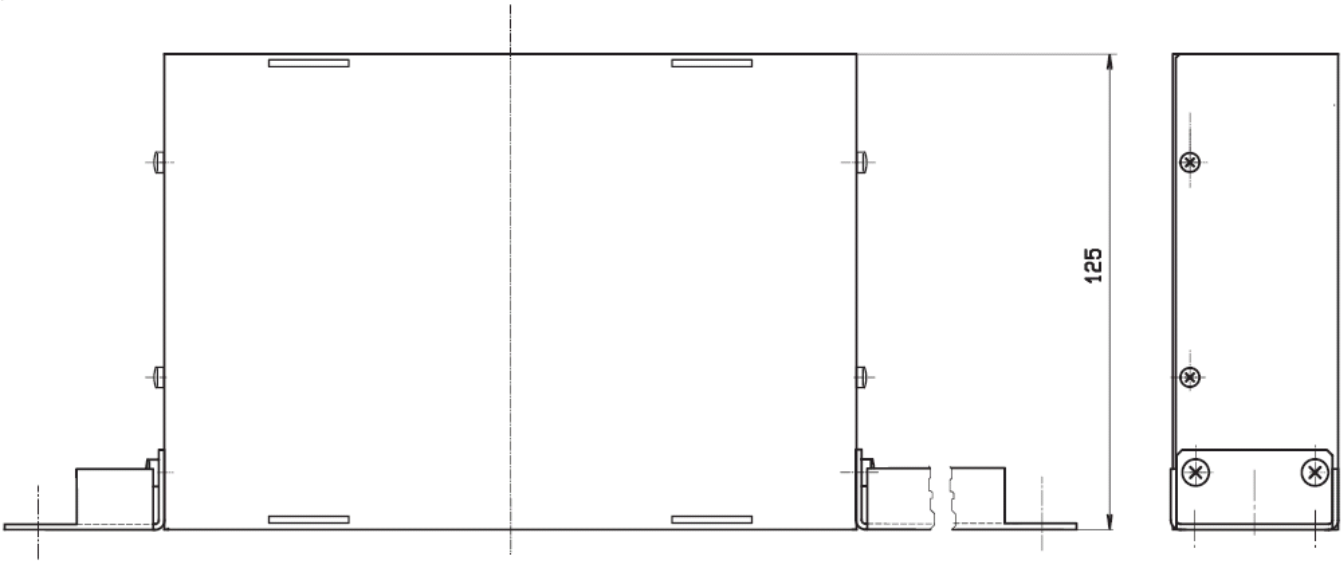

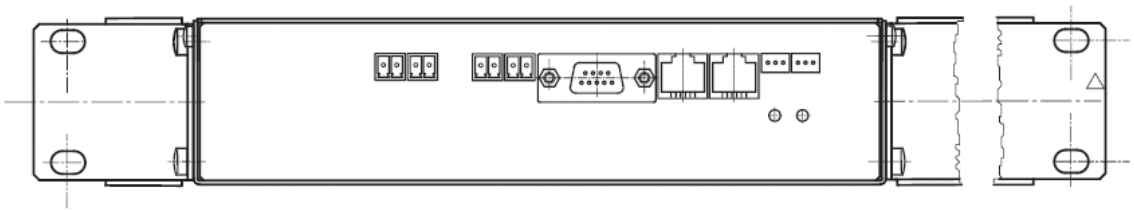

Product specifications

- **Ethernet**: RJ45 – 10BASE-T/10 Mbit/s
- **Communication**: WEB, SNMP, XML, SMTP, DHCP

- **4 probe inputs:** RJ11 ports for connecting 1-Wire probes (temperature, humidity...)
  - **In total you can connect up to 12 probes (using T-Hubs) (**1-Wire and **1-Wire UNI** probes supported)

- **6 digital inputs:** Dry contact inputs (volt free)
- **2 digital outputs:** Relay contact outputs, each output controls a NO and a NC contact

- **Configuration DIP switches**
  - DIP1 = On activates Serial SETUP mode (9600 8N1)
    Restores factory defaults when 5x toggled within 5 seconds after power up
  - DIP2 = On prevents changes in the configuration

- **Device features**
  - **Alarm** when a preset threshold is exceeded
  - **Remote monitoring** of input states and temperature sensors
  - Remote **relay output control**
  - **Local relay output control** with Alarm conditions (Local Condition)

- **Power supply:** +12V / 250 mA
- **Dimensions:** 184 x 44 x 125 [mm] (1U)
- **LED indicators:** Power, LINK, STATUS, ALARM

ETHERNET	
Interface	RJ45 (10BASE-T) – 10 Mbps or 10/100 Mbps network compatible
Supported protocols	IP: ARP, TCP/IP (HTTP, Modbus over TCP, NTP, SMTP), UDP/IP (SNMP)
SNMP compatibility	Ver:1.00 compatible, some parts of the ver 2.0 implemented
SENSORS	
Port	S1, S2, S3, S4
Type	HWg original accessories: 1-Wire or 1-Wire UNI
Connector	RJ11 (1-Wire Bus)
Sensors	Up to 12 sensors in total
Sensors distance	Up to 60m per each single port - 4x 60m in total
DRY CONTACT INPUTS	
Port	I1, I2, I3, I4, I5, I6
Type	Digital Input (ready to NO/NC Dry or Wet contact)
Sensitivity	1 (On) = 0…500 Ω (Right pin from terminal block can be connected with 12V GND)
Max. distance	Up to 50m
OUTPUTS	
Port / type	OUT1, OUT2 / Relay contacts (NC-COM-NO)
Max. load	up to 48W (4A/12V or 1A/48V)
State	Power up state (no state restart memory)
GSM MODEM	
Port	RS-232 / Cannon DB9M
Type	Serial port (RxD, TxD, RTS, CTS, GND)
Usage	GSM modem / Serial setup configuration with Dip1=ON
POWER input	
Port	POWER 9-15V DC
Type	Main device power input (typically 400 mA + external devices)
Connector	Jack (barrel, inner 2.5 mm outer 6.3 mm) & Terminal block (parallel connection)
POWER OUT	
Port	12V, 12V, 12V (Terminal blocks)
Type	12V output for external device (GSM modem, sensors..) - powered from power input (require external fuse for over current protections).
LED Status indicators	
POWER	Green - power OK
LINK & Activity	Yellow - Ethernet connectivity
ALARM	Red - Any sensor in alarm state
GSM	Green – GSM modem activity
DIP SWITCH	
DIP1: Setup	ON = RS-232 Setup mode over serial port (RS-232 mode only) **Load defaults:** Toggle 3 times during first 5 seconds after power-up to load default settings.
DIP2: Security	ON = Security mode - remote configuration disabled OFF = Non-Security mode - remote configuration enabled
Physical parameters	
Temperature range	Operating: -10 to 65 °C / Storage: -25 to 85 °C
MTBF	> 90 000 hours
Dimensions / Weight	182 x 44 x 125 [mm] / 500 g
EMC	FCC Part 15, Class B, CE - EN 55022, EN 55024, EN 61000

Relay outputs

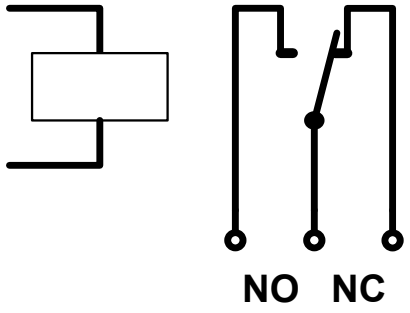

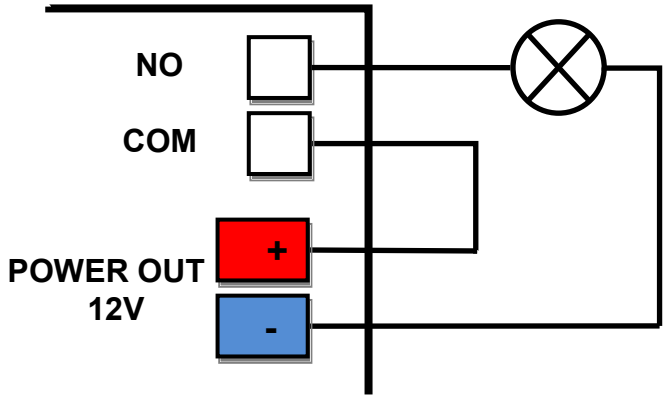

- NO and NC labels apply to Off (0) state, or device turned off
- When the output is On (1), a "**Normally Open**" (**NO**) relay contact is closed
- **Indication:** Contact state (closed / open) is indicated by a LED
- **Isolation**: The double-throw contact is electrically isolated from the rest of the device
- **ID range:** Outputs use ID addresses from 151 to 180

Dry contact inputs

Digital input terminals may be connected to voltage-free contacts or the GND pin. The inputs are electrically connected to the 12V power supply. Never connect the inputs to the 48V supply voltage!

- Unconnected inputs read as "**0 (Off)**"
- Active inputs read as "**1 (On)**"
- **Supported sensors:** Any contact without external voltage (dry contact)
- **Polling period:** 800 ms
- **Range of sensor IDs:** Inputs use IDs from 1 to 24

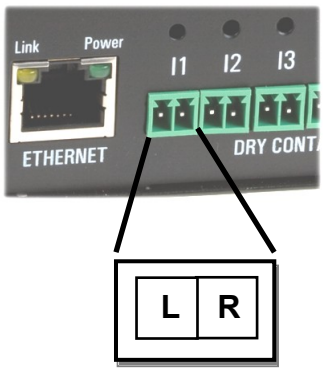

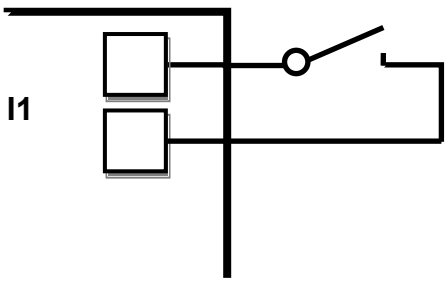

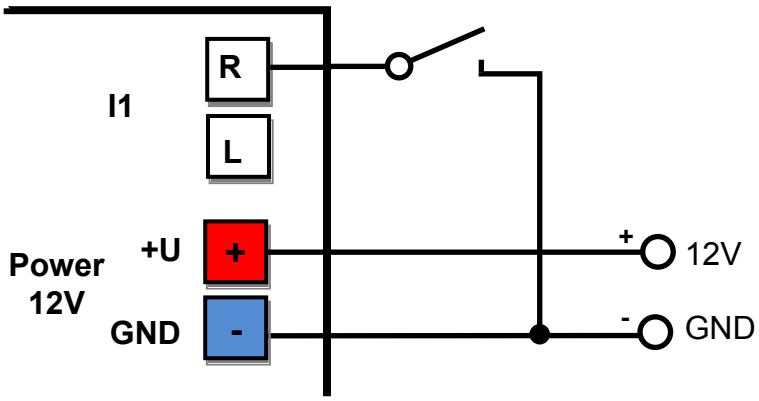

M2M interface

This product can be used with third-party SW applications.
For a description of the interfaces (XML format, detailed description of SNMP, mapping of Modbus/TCP variables), see the detailed "**Poseidon family**" manual.

- **XML** (over HTTP)
- **SNMP**, SNMP traps
- **Modbus/TCP**
- **SMTP** (E-mail)

TIP

- For a detailed description of the **M2M** interfaces and interfacing details, see the **detailed Poseidon family manual**.

SDK (Software Development Kit)

Programmers can take advantage of the **HWg SDK** (Software Development Kit) with an ActiveX interface and ready-made examples.

- VB - **Visual Basic (6.0)** - *(3xx examples)*
- Borland C++ *(1xx examples)*
- Microsoft Visual C++ *(2xx examples)*
- C# / .NET *(5xx examples)*
- Borland Delphi *(4xx examples)*
- JAVA
- PHP / ASP
- **other** examples that do not directly use SDK functions (all 9xx examples)

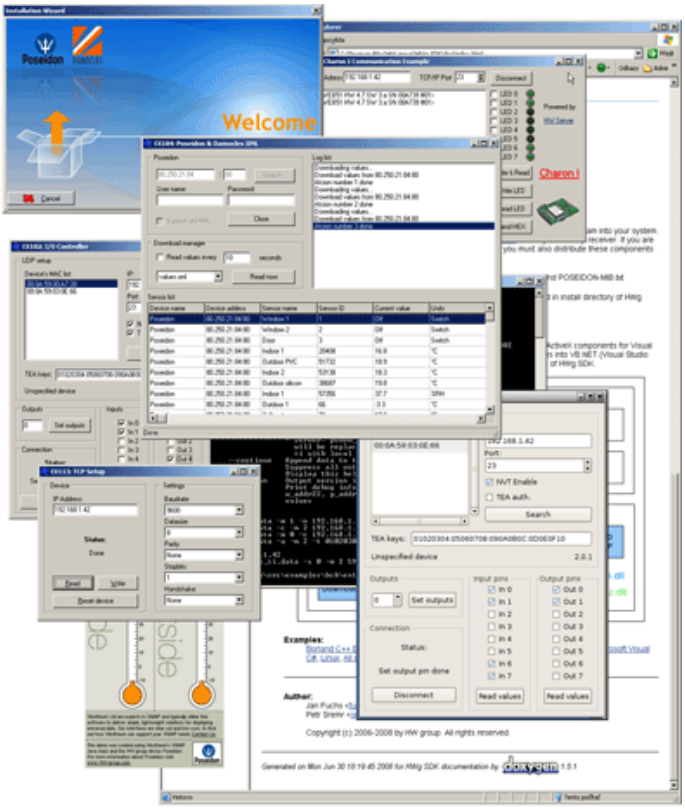

Note: *The latest version of HWg SDK is available for download at the HWg website. You just need to register your e-mail.*

Updating the firmware over the WEB

Upload the firmware in a **.hwg** file over http to `http://x.x.x.x/upload/`.
Connection problems etc. must be avoided during file transfer. If the update fails, upload the firmware over RS-232.

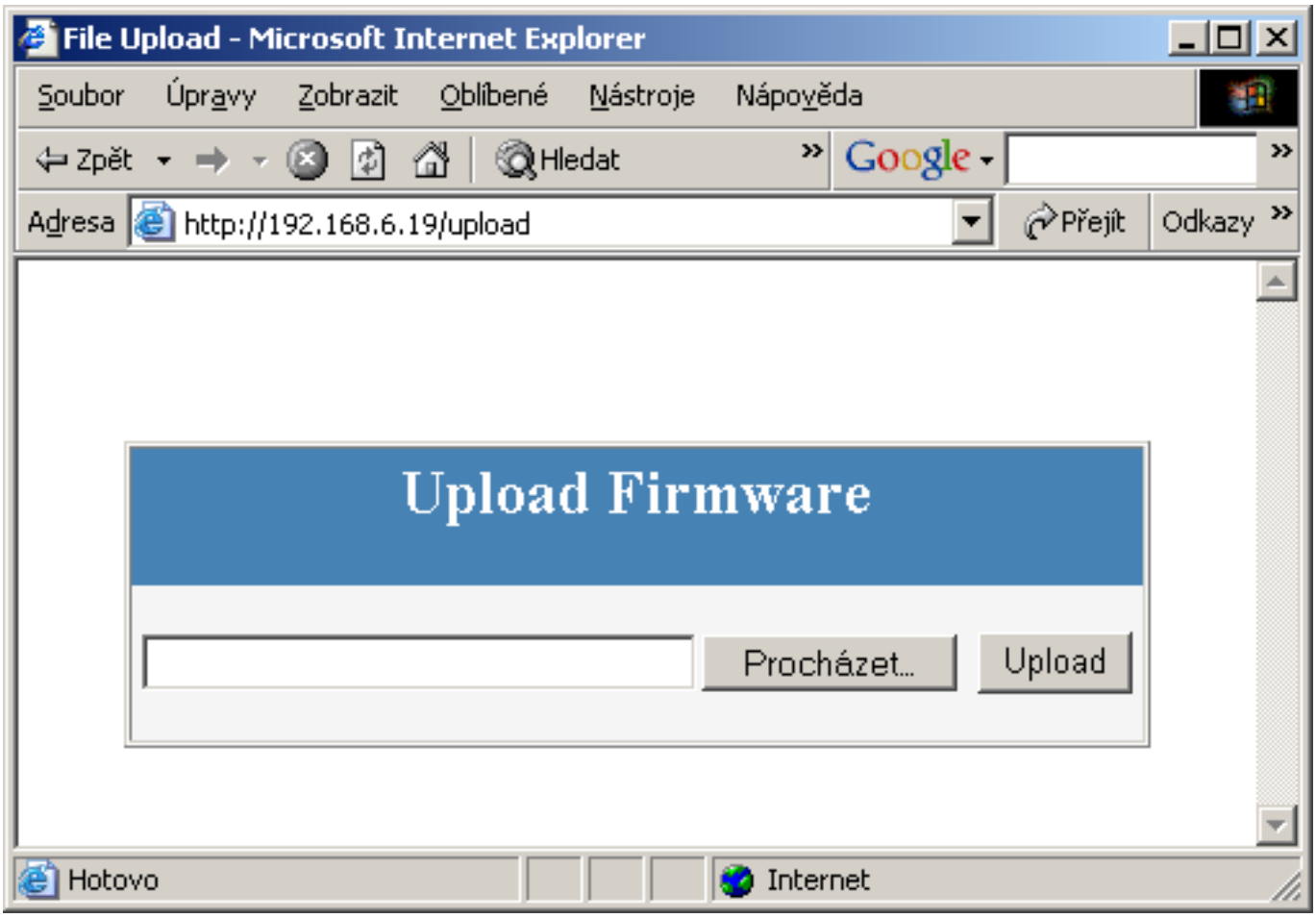

Firmware in the .HWg format is available on our website, or on the supplied CD.

Load defaults

Reset the device to factory defaults (clear all the passwords):

1) Switch off the device
2) Set DIP1 to ON
3) Power on the device
4) Toggle DIP1 several times within 5 seconds after power-up.

TIP

- For a detailed description and further details, see the **detailed Poseidon family manual**.